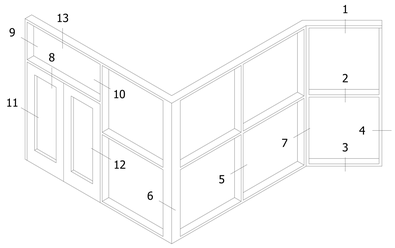

TYPICAL ELEVATION

VersaTherm
SERIES STOREFRONT

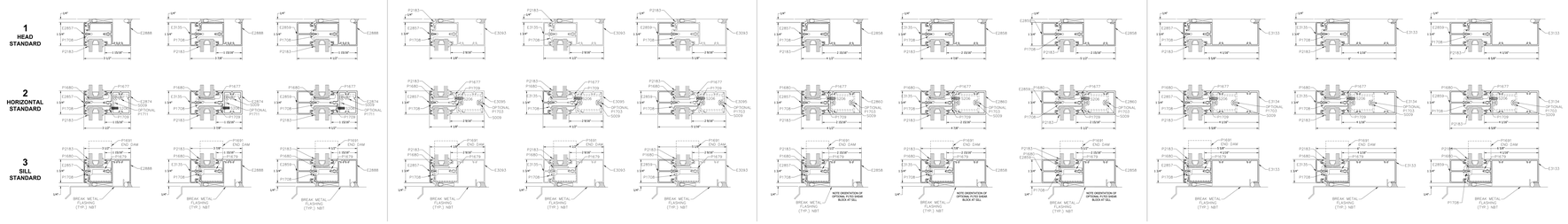

HORIZONTALS

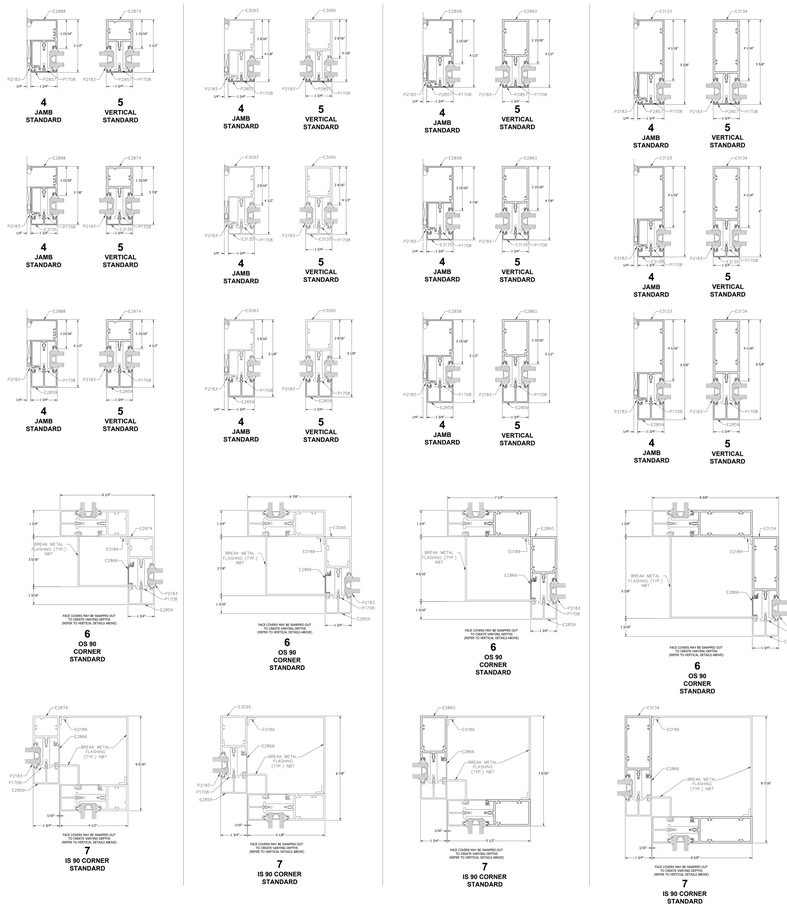

VERTICALS & CORNERS

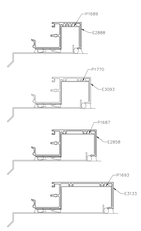

SPLICE DETAILS
SILL SHOWN; HEAD SIMILAR

GLAZING INFILL OPTIONS

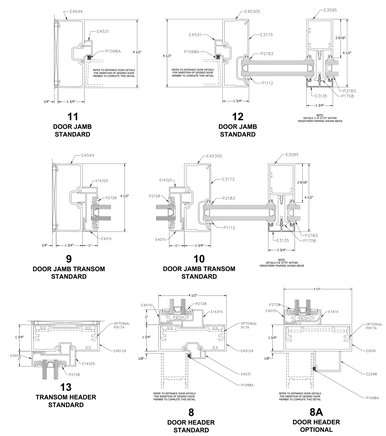

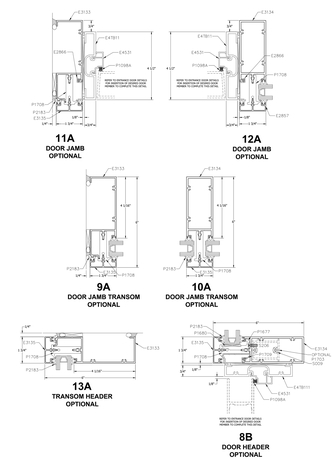

DOOR DETAILS
VERSATHERM w/SUBFRAME

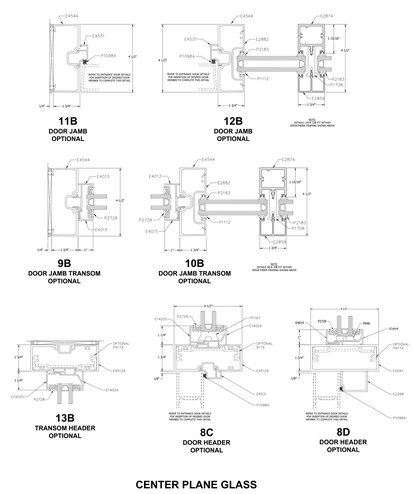

DOOR DETAILS
1-3/4" X 4-1/2" FRAMING

TUBELITE®
DEPENDABLE

LEADERS IN ECO-EFFICIENT STOREFRONT, CURTAINWALL AND ENTRANCE SYSTEMS

Last Revised: 01/07/2022