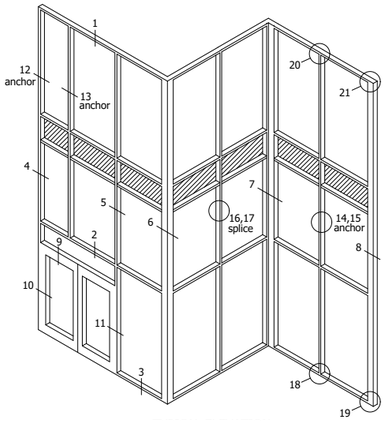

TYPICAL ELEVATION

400TU ULTRA THERMAL CURTAIN WALL
6" SYSTEM DEPTH, 3 ¾" BACK MEMBER,
DUAL GLAZE, SHEAR CLIP
ALUMINUM PRESSURE PLATE

FACE COVER PINNING

FOR HIGH THERMAL PERFORMANCE
PRESSURE PLATES SEE THERMAL
PRESSURE PLATE PERIMETER SHEET.
PERIMETER SHEET INCLUDES POLYAMIDE
PRESSURE PLATE.

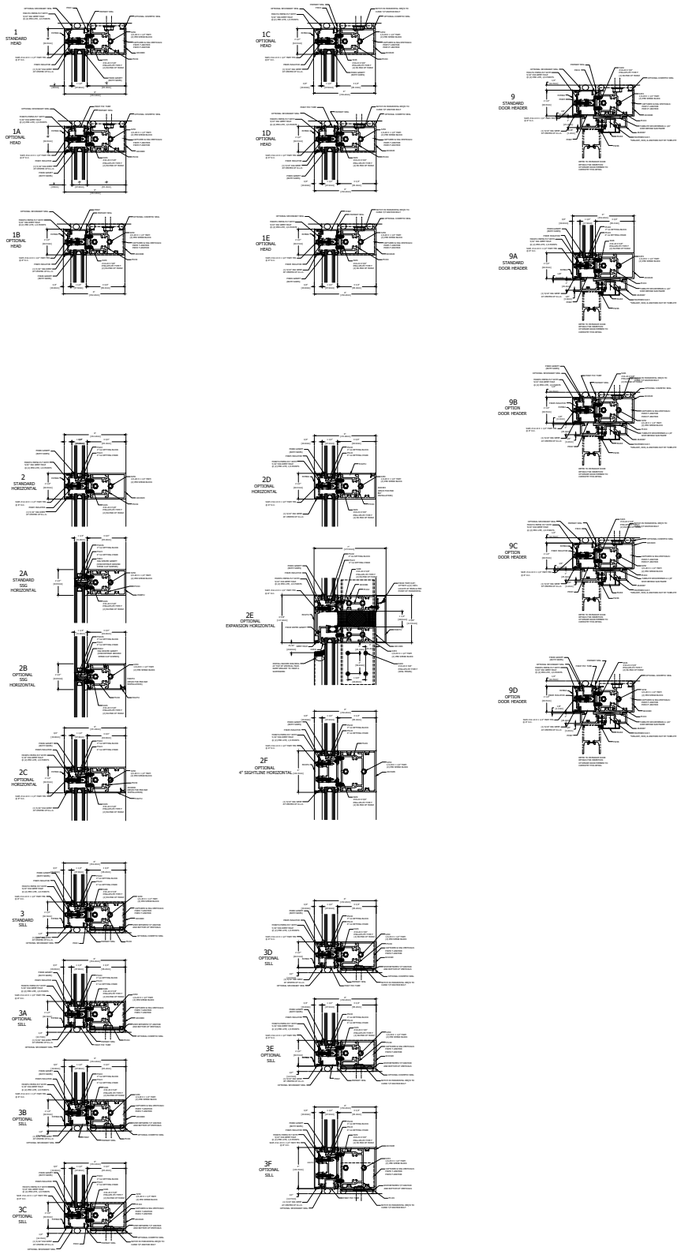

HORIZONTAL DETAILS

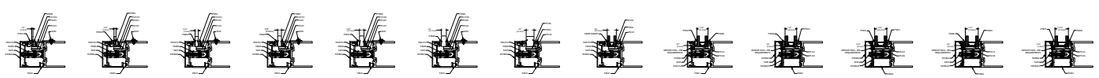

OPTIONS FOR NON-TYPICAL INFILL

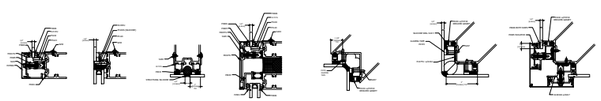

OPTIONS FOR 1/4" INFILL

GLAZING INFILL OPTIONS

NOTE: TYPICAL GLASS BITE 1/2" FROM DLO
UNLESS NOTED AT DETAIL.

GLASS SHOWN DOES NOT NECESSARILY REPRESENT FINAL CONFIGURATION.
CONSULT GLASS MANUFACTURER FOR SPECIFIC GLASS MAKE UP.

VERTICAL DETAILS

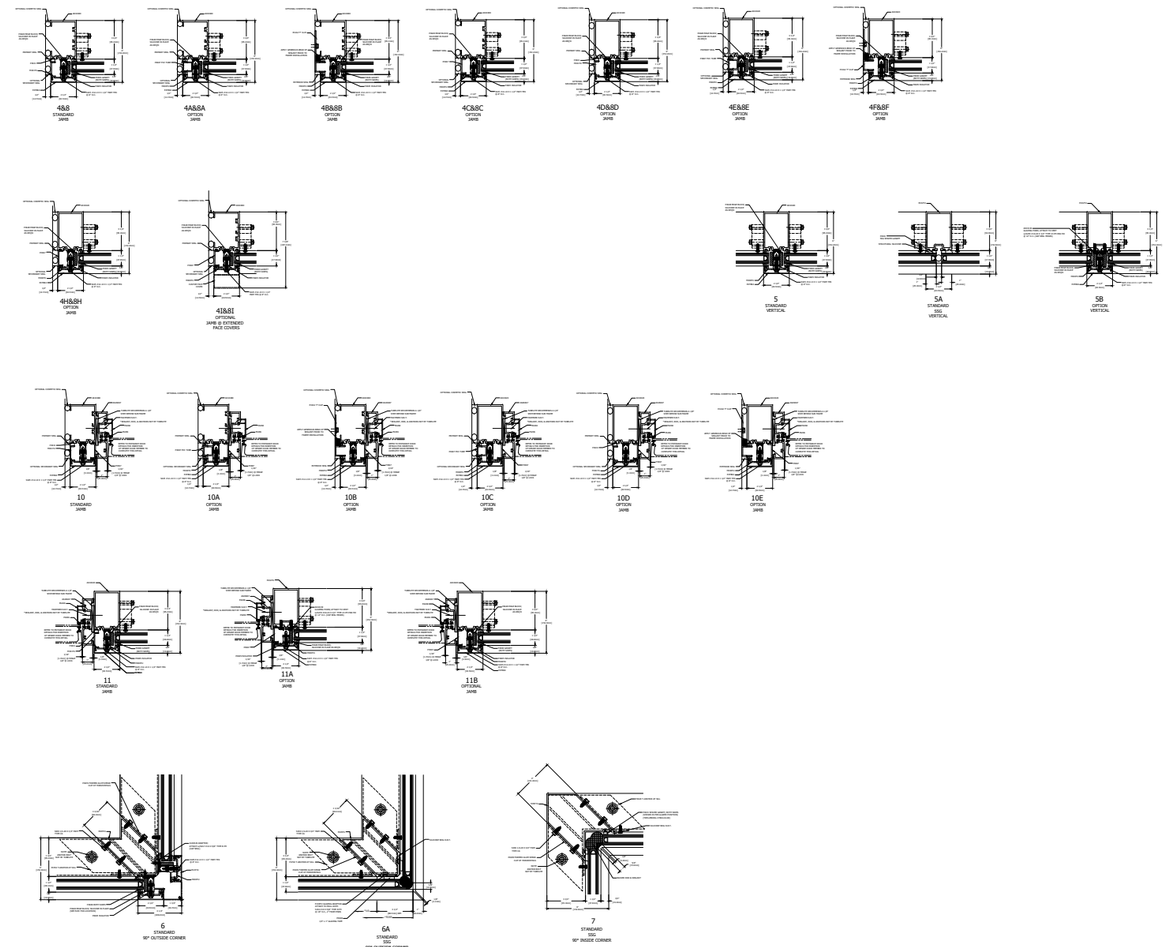

SPLICE AND ANCHOR DETAILS

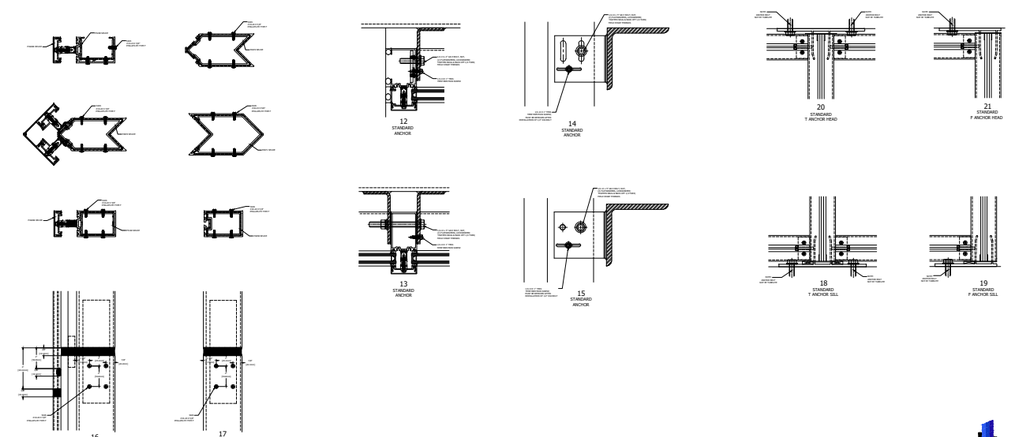

Alumicor®
BUILDING EXCELLENCE
TUBELITE®
DEPENDABLE

Last Revised: 02-08-2023